RAK-ILLUSION-W/HIDDEN FIXATIONS

Close Coupled | Water Closet



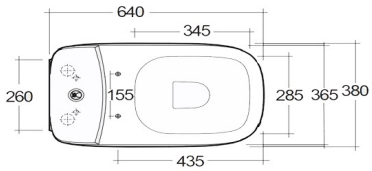

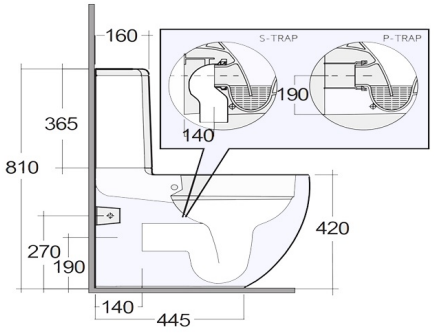

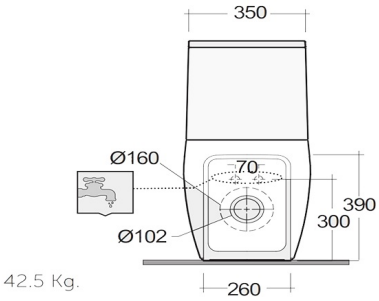

42.5 Kg.

TECHNICAL SPECIFICATIONS

Suite:	RAK-ILLUSION
Type:	Close Coupled
Dimensions:	640 x 380 mm
Weight:	42.5 Kg
Color:	Alpine White
Trap type:	P Trap & S Trap
Trapway type:	Concealed
Seat cover options:	Urea
Bowl shape:	Rounded Rectangle
Flush Type:	Dual Flush
Flush Capacity:	Compatible with 6/3L dual flushing, 4,5/3L dual flushing, in accordance with en997- type 1

Code	Name
ILLWC1146AWHA	RAK-ILLUSION-W/HIDDEN FIXATIONS
ILLWT1800AWHA	RAK-Illusion Water Tank (Bottom Inlet)
ILLWT1801AWHA	RAK-Illusion Water Tank (Lateral/Side Inlet)
ILLWT1802AWHA	RAK-Illusion Water Tank (Rear Inlet)
ILLSC3901WH	RAK-Illusion Soft Close Urea Seat Cover (WH)
ILLSC3903WH	RAK-Illusion Urea Soft Close and Quick Release Seat Cover
ILLSC3900WH	RAK-Illusion Urea Quick Release Seat Cover

Dimensions: All dimensions in mm. Tolerance of vitreous china & fireclay items: ± 5% for below 200mm and ± 3% for above 200mm; for all other items tolerance ± 1%. Note: Due to a continuing development program to improve design and performance, the manufacturer reserves all rights to vary specifications without prior information. Please note accessories are for photographic use only.